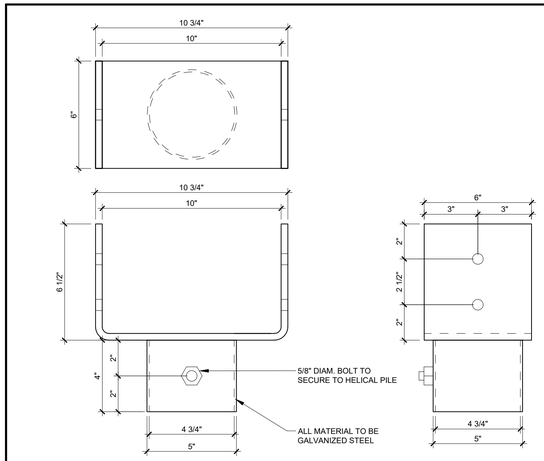

1 PILE CAP #1 - COMMON U-BRACKET

SCALE = 3" = 1'-0"

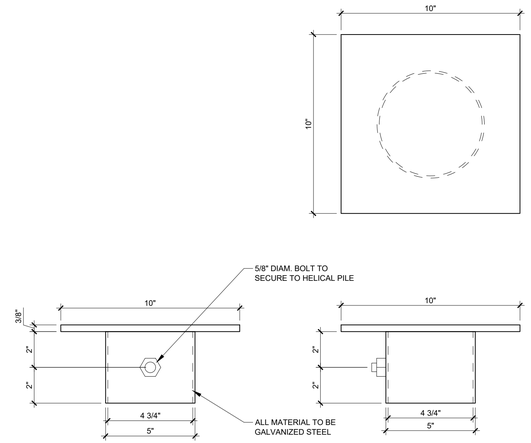

2 PILE CAP #2 - FLAT PLATE

SCALE = 3" = 1'-0"

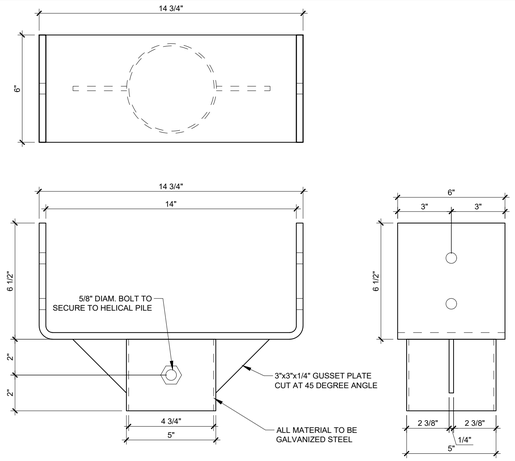

3 PILE CAP #3 - ELONGATED U-BRACKET

SCALE = 3" = 1'-0"

4 RESERVED

SCALE = N.T.S.

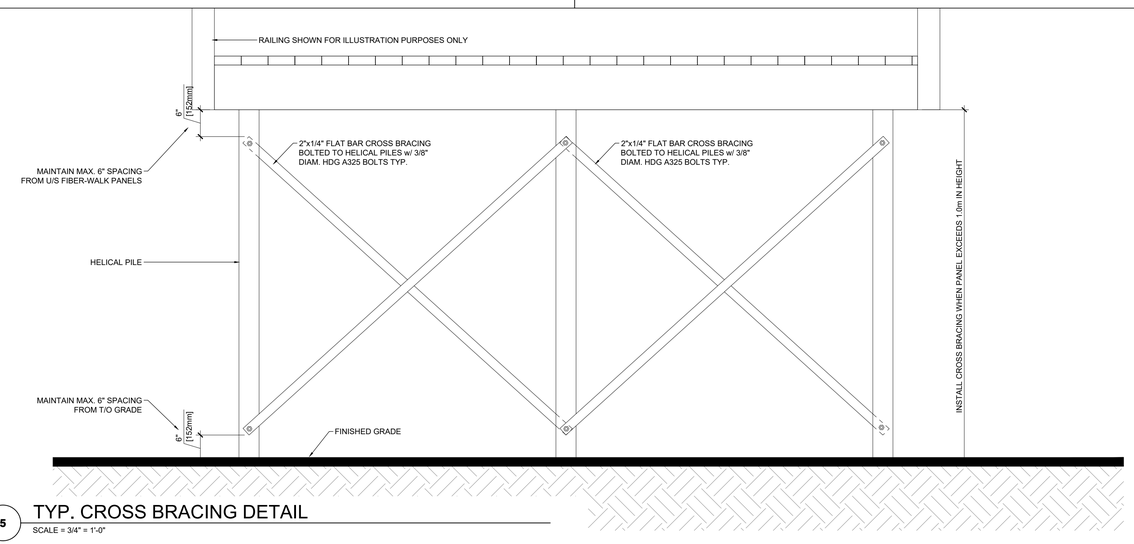

5 TYP. CROSS BRACING DETAIL

SCALE = 3/4" = 1'-0"

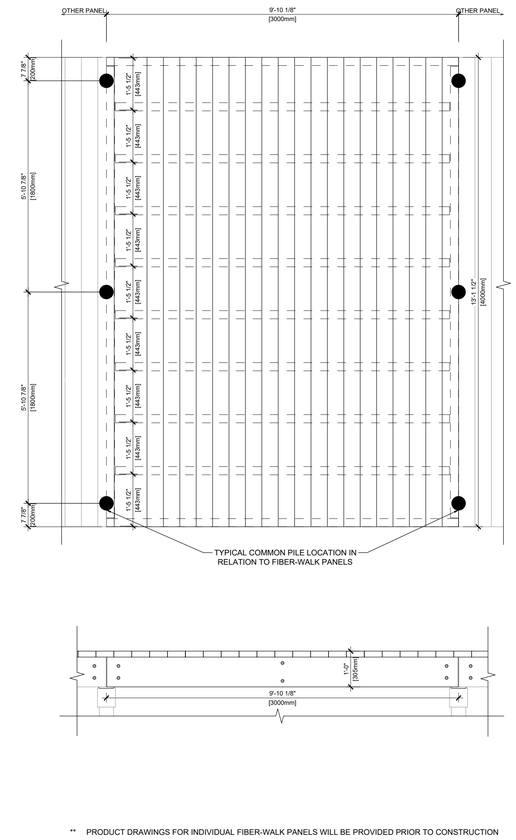

** PRODUCT DRAWINGS FOR INDIVIDUAL FIBER-WALK PANELS WILL BE PROVIDED PRIOR TO CONSTRUCTION

6 COMMON FIBER-WALK PANEL - 3.0m x 4.0m

SCALE = 1/2" = 1'-0"

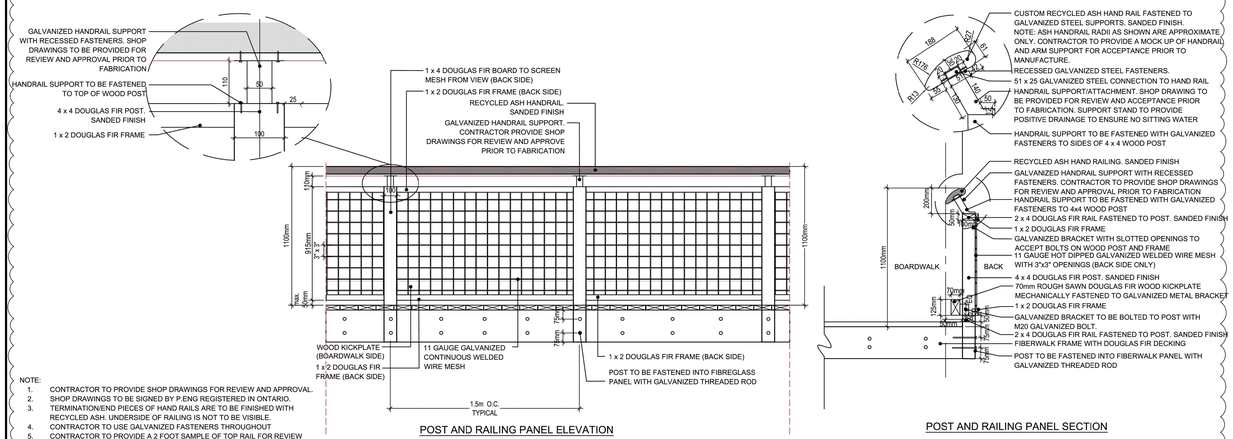

NOTE:
1. CONTRACTOR TO PROVIDE SHOP DRAWINGS FOR REVIEW AND APPROVAL.
2. SHOP DRAWINGS TO BE SIGNED BY P.ENG REGISTERED IN ONTARIO.
3. TERMINATION/END PIECES OF HAND RAILS ARE TO BE FINISHED WITH RECYCLED ASH. UNDERSIDE OF RAILING IS NOT TO BE VISIBLE.
4. CONTRACTOR TO USE GALVANIZED FASTENERS THROUGHOUT
5. CONTRACTOR TO PROVIDE A 2 FOOT SAMPLE OF TOP RAIL FOR REVIEW AND APPROVAL PRIOR TO CONSTRUCTION
6. RAILINGS SHALL BE FREE OF ANY KNOTS (CLEAR) or CRACKS

7 TYP. POST AND RAILING SECTION/ELEVATION

SCALE = N.T.S.

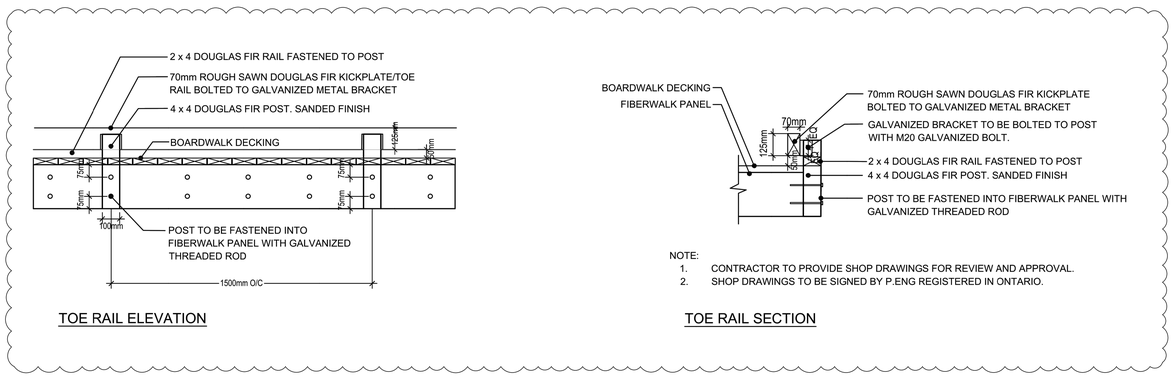

NOTE:
1. CONTRACTOR TO PROVIDE SHOP DRAWINGS FOR REVIEW AND APPROVAL.
2. SHOP DRAWINGS TO BE SIGNED BY P.ENG REGISTERED IN ONTARIO.

8 TYP. TOE RAIL SECTION/ELEVATION

SCALE = N.T.S.

REVISIONS

LTR:	DATE:	DESCRIPTION:
A	22-09-22	ISSUED FOR TENDER
B	22-09-30	ISSUED FOR ADDENDUM #2
C	22-10-04	ISSUED FOR ADDENDUM #3

TRUE NORTH:

CRITERIUM JANSEN ENGINEERS
25 FIRST STREET
ORANGEVILLE, ON. L9W 2C8
1-(888) 940-0571

ZOO BOARDWALK (A2)

TYP. DETAILS

CLIENT: Connor Blaikie, WSP

DATE: 2022-07-10	DESIGN BY: MA		
DRAWN BY: PB	REVIEWED BY: MA		
PROJECT No.: 07-4502	DRAWING No.: A300	REV.: 0	
SCALE: AS NOTED			